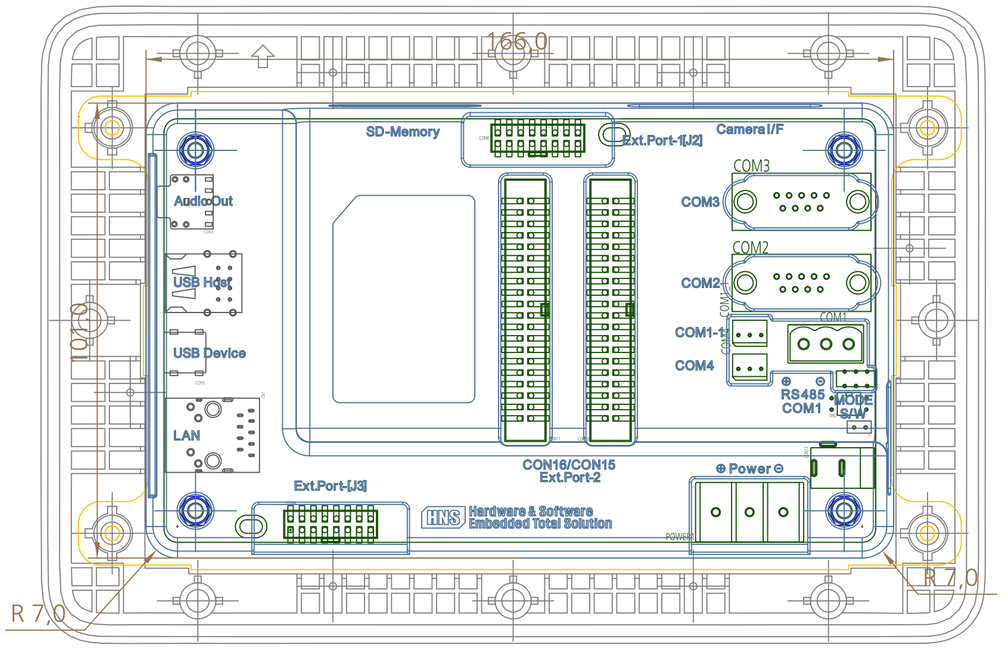
166,0
101,0
R 7,0
R 7,0
SD-Memory
Ext.Port-1[J2]
Camera I/F
Audio Out
USB Host
USB Device
LAN
COM3
COM2
COM1-1
COM4
COM1
RS485
COM1
MODE
S/W
CON16/CON15
Ext.Port-2
Ext.Port-[J3]
Power
Hardware & Software
Embedded Total Solution

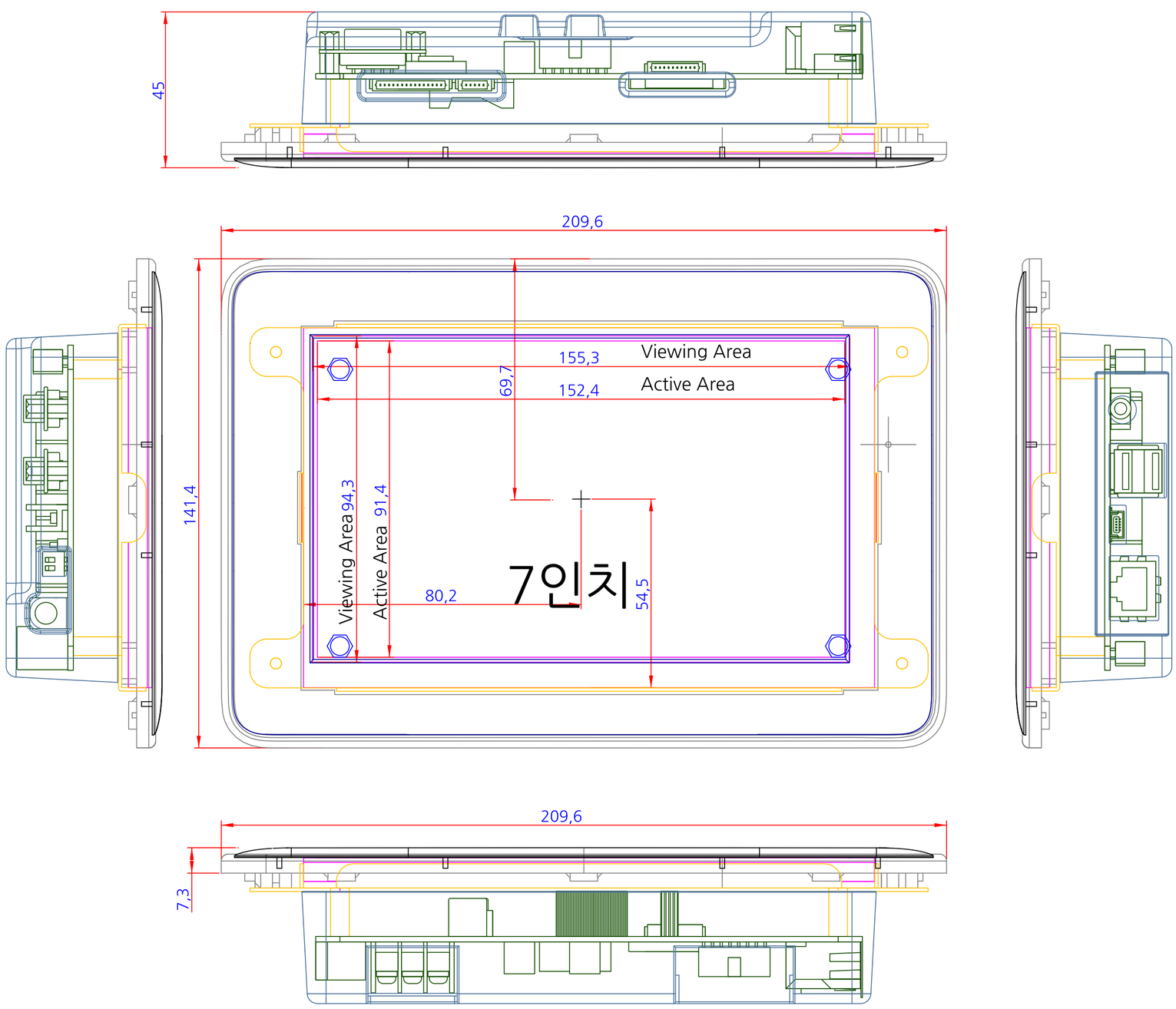
45
209,6
155,3
Viewing Area
152,4
Active Area
69,7
141,4
Viewing Area 94,3
Active Area 91,4
80,2
7인치
54,5
209,6
7,3